Cambridge Assessment International Education

Cambridge IGCSE™

PHYSICS **0625/22**

Paper 2 Multiple Choice (Extended) **February/March 2022**

45 minutes

You must answer on the multiple choice answer sheet.

You will need: Multiple choice answer sheet
Soft clean eraser
Soft pencil (type B or HB is recommended)

INSTRUCTIONS

- There are **forty** questions on this paper. Answer **all** questions.
- For each question there are four possible answers **A**, **B**, **C** and **D**. Choose the **one** you consider correct and record your choice in soft pencil on the multiple choice answer sheet.
- Follow the instructions on the multiple choice answer sheet.
- Write in soft pencil.
- Write your name, centre number and candidate number on the multiple choice answer sheet in the spaces provided unless this has been done for you.
- Do **not** use correction fluid.
- Do **not** write on any bar codes.
- You may use a calculator.
- Take the weight of 1.0 kg to be 10 N (acceleration of free fall = 10 m / s^2).

INFORMATION

- The total mark for this paper is 40.
- Each correct answer will score one mark.
- Any rough working should be done on this question paper.

This document has **16** pages.

IB22 03_0625_22/3RP
© UCLES 2022

[Turn over

www.root19.com +91 - 9969 353 391

1 A student investigates a pendulum.

He measures the time for the pendulum to complete 20 oscillations.

He repeats the experiment three more times.

The readings are shown.

experiment	time for 20 oscillations / s
1	17.6
2	19.8
3	17.6
4	18.6

What is the average period of the pendulum?

A 0.88 s **B** 0.92 s **C** 17.6 s **D** 18.4 s

2 A tennis ball falls from the upstairs window of a house.

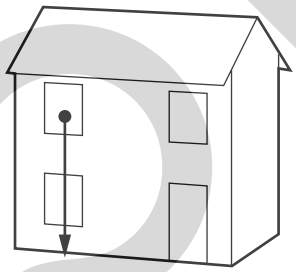

What can be said about the acceleration of the ball if air resistance is ignored?

A It depends on the density of the ball.

B It depends on the mass of the ball.

C It increases as the ball falls.

D It stays the same as the ball falls.

3 A car joins a road at a speed of 14 m / s and accelerates at 4.0 m / s^2 for 5.0 seconds.

What is the final speed of the car?

A 18 m / s **B** 20 m / s **C** 32 m / s **D** 34 m / s

© UCLES 2022
www.root19.com

+91 - 9969 353 391

4 The gravitational field strength is 8.8 N / kg on Venus and 3.8 N / kg on Mars.

An object has a weight of 42 N on Venus.

What are the mass and the weight of the object on Mars?

	mass / kg	weight / N
A	4.8	18
B	4.8	42
C	11	42
D	11	97

5 A student carries out an experiment to find the density of a rock.

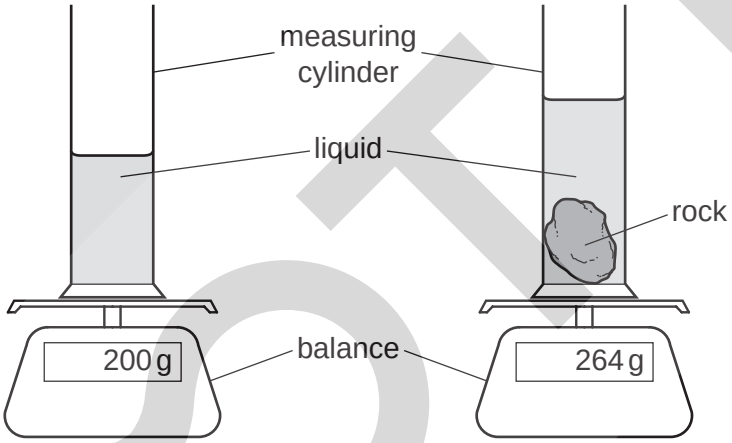

Which two measurements does the student need to make to determine the density of the rock?

	measurement 1	measurement 2
A	increase in mass	increase in volume of liquid
B	final mass	increase in depth of liquid
C	increase in mass	increase in depth of liquid
D	final mass	increase in volume of liquid

6 A car has a mass of 1500 kg. A constant resultant force acts on the car and the car accelerates from 15 m / s to 20 m / s in 4.0 seconds.

What is the magnitude of the resultant force acting on the car?

A 300 N **B** 1200 N **C** 1900 N **D** 7500 N

© UCLES 2022
www.root19.com

+91 - 9969 353 591

7 A metal wire is loaded up to the limit of proportionality.

Which statement is correct?

A Hooke's law is not obeyed when the load is increased from zero to this point.

B When the load is increased beyond the limit of proportionality, the diameter of the wire will increase.

C When the load is removed, the wire returns to its original length.

D Up to the limit of proportionality, there is no change in the shape of the wire.

8 The diagram shows a uniform metre rule, MN, pivoted at its midpoint P.

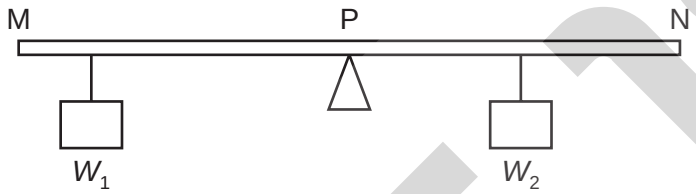

Two weights, W_1 and W_2, are hung either side of the pivot.

The rule remains balanced.

Which row is correct?

	direction of resultant moment about point M	direction of resultant force on the rule
A	clockwise	downwards
B	clockwise	zero
C	zero	downwards
D	zero	zero

9 Which physical quantity is a vector?

A mass

B density

C temperature

D velocity

10 A resultant force of 500 N acts for 10 s on a car of mass 1000 kg. This causes the velocity of the car to double.

What is the final velocity of the car?

A 5 m / s **B** 10 m / s **C** 20 m / s **D** 50 m / s

www.root19.com +91 - 9969 353 391

11 A child pushes a toy car along a horizontal surface and then releases it.

As the car slows down, what is the main energy transfer?

A from chemical to thermal

B from chemical to kinetic

C from kinetic to gravitational (potential)

D from kinetic to thermal

12 At time = 0, a cannonball is stationary inside a cannon. The cannonball is then fired from the cannon.

At time = *t*, the cannonball moves forwards and the cannon moves backwards.

What happens to the total kinetic energy and the total momentum of the cannon and the cannonball between time = 0 and time = *t*?

	total kinetic energy of cannon and cannonball	total momentum of cannon and cannonball
A	changes	changes
B	changes	remains the same
C	remains the same	changes
D	remains the same	remains the same

13 In a small hydroelectric power scheme, 800 kg of water drops through a vertical height of 2.2 m every second. The electrical output is 10.6 kW.

What is the efficiency of the scheme?

A 0.60% **B** 17% **C** 60% **D** 75%

14 An object is at rest on a horizontal surface.

Which equation is used to calculate the pressure that the object exerts?

A $\frac{\text{mass of the object}}{\text{area of contact}}$

B $\frac{\text{weight of the object}}{\text{area of contact}}$

C mass of the object × area of contact

D weight of the object × area of contact

www.root19.com +91 - 9969 353 591

15 Smoke particles, illuminated by a bright lamp, are seen through a microscope. They move about randomly.

What causes this motion?

A attraction between the smoke particles and the molecules of the air

B collisions between the smoke particles and the molecules of the air

C evaporation of the faster-moving smoke particles

D warming of the smoke particles by the lamp

16 Ether is a liquid that evaporates easily at room temperature.

The rate at which ether evaporates can be increased by bubbling air through it.

The diagram shows this process.

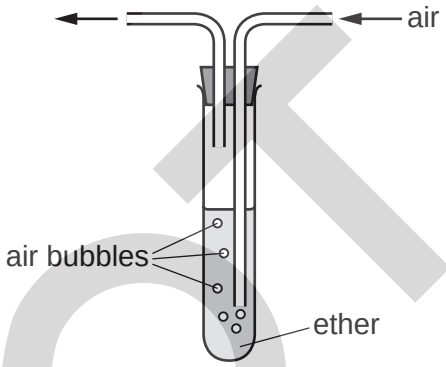

Students give three suggestions why the rate of evaporation increases when air is bubbled through.

Student 1 suggests that the temperature of the ether is decreased.

Student 2 suggests that the surface area of the ether is increased.

Student 3 suggests that evaporated molecules are removed at a greater rate.

Which students are correct?

A 1 and 2 **B** 1 and 3 **C** 2 and 3 **D** 3 only

www.root19.com +91 - 9969 353 391

17 Some ice is slowly heated and its temperature is measured. A graph is plotted of temperature against time.

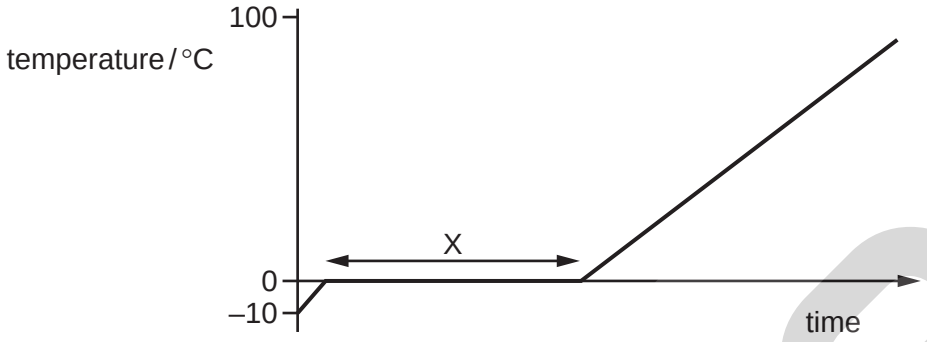

Which row describes what happens to the thermal energy and to the temperature in section X?

	thermal energy	temperature of ice
A	gained by ice	rises
B	gained by ice	stays the same
C	not gained by ice	rises
D	not gained by ice	stays the same

18 The diagram shows the apparatus needed for an experiment to determine the specific heat capacity of the material from which an object is made.

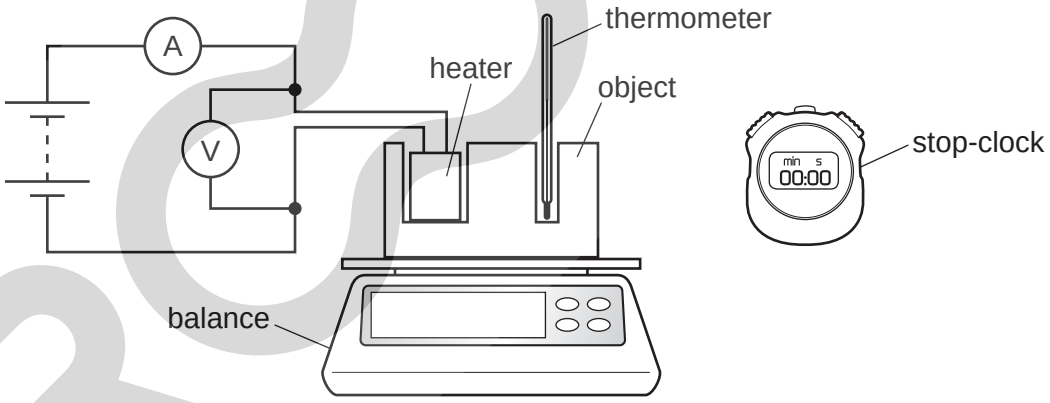

Which piece of apparatus could be omitted if the purpose of the experiment is to determine the thermal capacity of the object?

A ammeter

B balance

C stop-clock

D thermometer

19 Both boiling and evaporation involve a change of state from liquid to gas.

Which row gives the correct difference between boiling and evaporation?

	boiling	evaporation
A	no bubbles are formed	bubbles are formed
B	occurs at all temperatures	occurs at a definite temperature
C	occurs throughout the liquid	occurs at the surface only
D	the temperature falls	the temperature remains constant

20 Which statement describes thermal conduction in a metal by electrons?

A Atoms and electrons move freely throughout the metal.

B Atoms and electrons vibrate about their fixed positions only.

C Electrons move freely throughout the metal.

D Electrons remain attached to atoms.

21 A tank contains water. Ripples are produced on the surface of the water. Refraction is observed.

What causes the ripples to refract?

A The cold water in the tank is replaced by warm water.

B The ripples change speed as they move from deep to shallow water.

C The ripples hit the wall of the tank.

D The ripples pass through a narrow gap.

22 The diagram shows wavefronts of a water wave passing through a gap in a barrier.

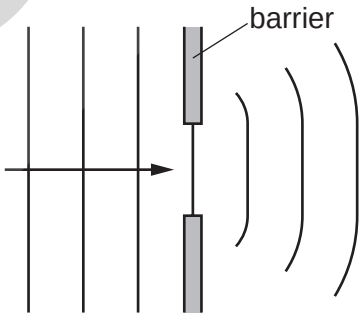

Which change will increase the diffraction of the wave as it passes through the gap?

A Increase the amplitude of the wave.

B Increase the width of the gap.

C Reduce the depth of water.

D Reduce the frequency of the wave.

www.root19.com +91 - 9969 353 391

23 The diagrams each show a ray of light from an object O passing through a thin converging lens.

The principal focuses in each diagram are labelled F.

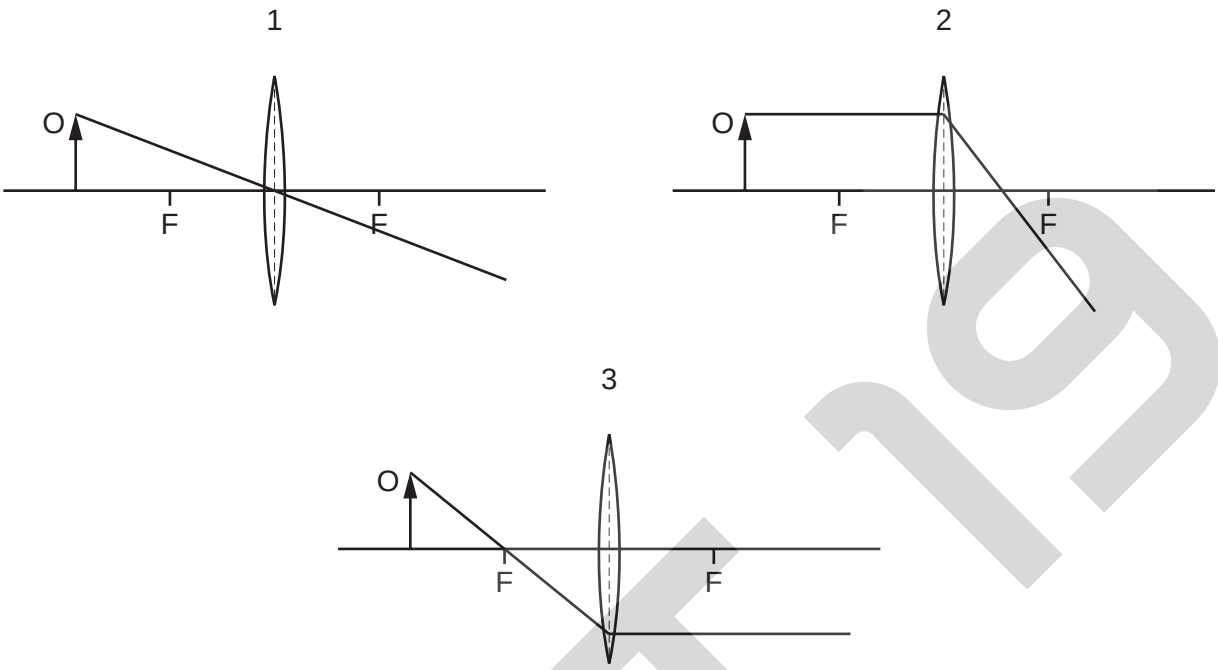

Which diagrams are correct?

A 1 and 2 **B** 2 only **C** 1 and 3 **D** 3 only

24 The diagram shows a ray of light inside an optical fibre approaching point X.

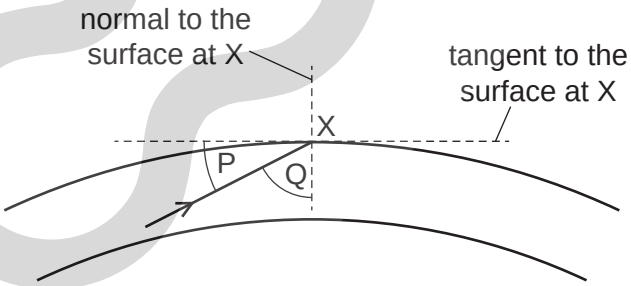

The light is totally reflected within the fibre.

The refractive index of the material of the optical fibre is 1.39.

Which condition ensures that total internal reflection occurs?

A Q < 45° **B** Q > 47° **C** P > 47° **D** P = Q

www.root19.com +91 - 9969 353 591

25 An eclipse of the Sun happens when the Moon comes between the Earth and the Sun.

Which statement is correct?

A Infrared radiation from the Sun disappears before visible light and ultraviolet radiation.

B Ultraviolet radiation from the Sun disappears before visible light and infrared radiation.

C Visible light from the Sun disappears before ultraviolet radiation and infrared radiation.

D Infrared radiation, ultraviolet radiation and visible light from the Sun all disappear at the same moment.

26 The diagram shows air particles in a sound wave.

Which row correctly identifies the position of a compression and position of a rarefaction?

	compression	rarefaction
A	X	Y
B	Y	X
C	V	Z
D	Z	V

27 Two isolated metal spheres are both negatively charged. The spheres are brought close together but do not touch.

Which diagram shows the charge distribution on the spheres?

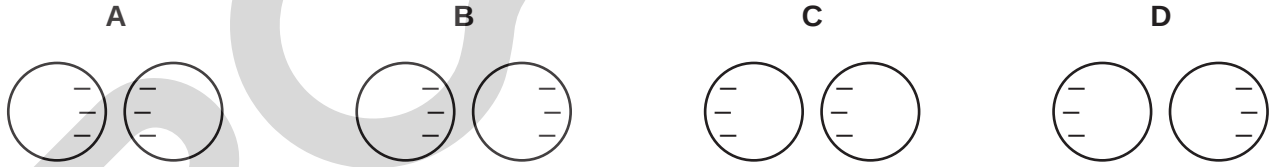

28 Two separate circuits have different power supplies. Both power supplies provide the same magnitude current.

Power supply P has an electromotive force (e.m.f.) of 1.5 V and power supply Q has an e.m.f. of 3.0 V.

Which statements about Q are correct when compared with P?

1 Q supplies twice the charge per unit time.

2 Q supplies twice the energy per unit charge.

3 Q supplies twice the energy per unit time.

A 1, 2 and 3 **B** 1 and 2 only **C** 1 and 3 only **D** 2 and 3 only

www.root19.com +91 - 9969 353 391

29 The diagram shows a piece of metal resistance wire.

Which wire, made of the same metal, has a smaller resistance?

A a wire of the same length with a larger diameter

B a wire of the same length with a smaller diameter

C a wire of greater length with the same diameter

D a wire of greater length with a smaller diameter

30 Which labelled component in the circuit shown controls the brightness of lamp X?

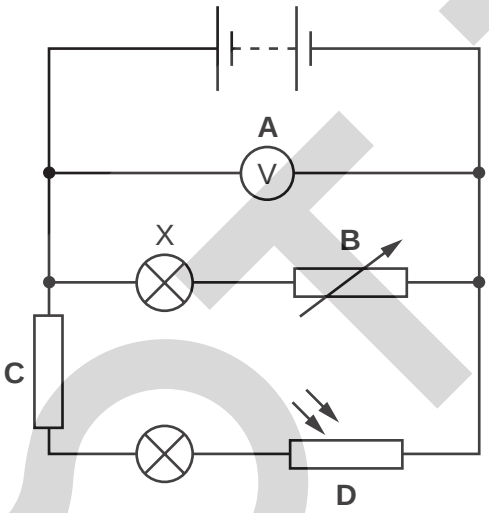

31 A circuit includes a battery, two identical resistors and five ammeters, P, Q, R, S and T.

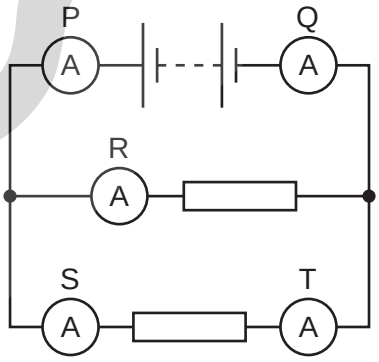

Which statement about the readings on the ammeters is **not** correct?

A P has a greater reading than Q.

B P has a greater reading than R.

C P has a greater reading than S.

D P has a greater reading than T.

www.root19.com +91 - 9969 353 591

32 An electrician sets up a potential divider circuit in a fridge so that when the fridge door is open and light from the room enters the fridge, a warning light turns on.

Which component does the electrician need to use in addition to a variable resistor?

A light-dependent resistor

B relay

C thermistor

D variable resistor

33 Two NAND gates are joined together as shown.

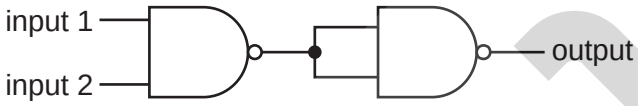

Which single logic gate is equivalent to this combination?

A AND **B** NAND **C** NOR **D** OR

www.root19.com +91 - 9969 353 391

34 The diagram shows an electric drill and safety guard.

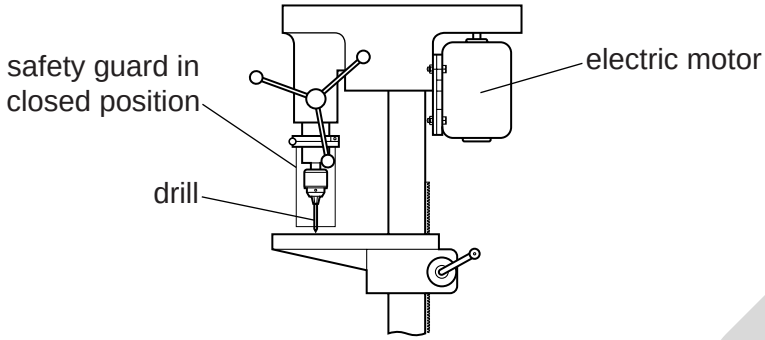

The drill requires the logic circuit shown.

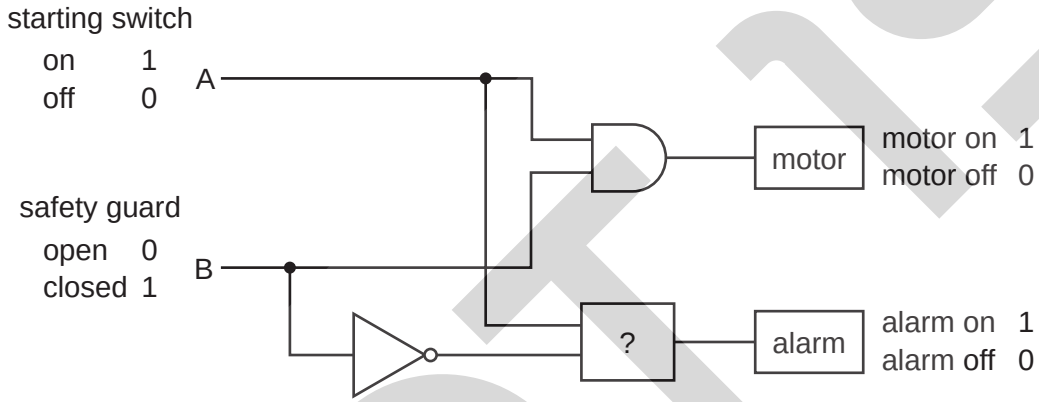

The circuit must only allow the motor to start when the safety guard is closed. If the safety guard is not closed when the starting switch is on, the alarm must sound.

Which logic gate is missing from the circuit?

A NOT **B** NAND **C** AND **D** NOR

35 Two magnets are placed near a current-carrying coil.

The diagram shows this experimental arrangement and the current direction in the coil.

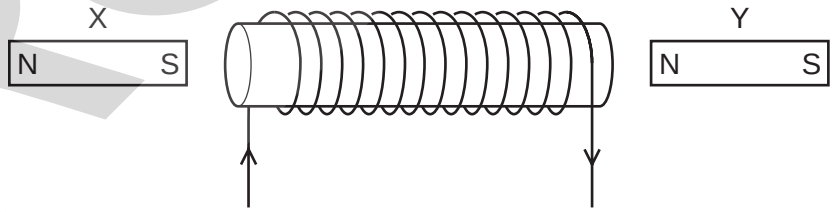

Which statement is correct?

A Both X and Y are attracted to the coil.

B Both X and Y are repelled by the coil.

C X is attracted to the coil and Y is repelled.

D X is repelled by the coil and Y is attracted.

www.root19.com +91 - 9969 353 591

36 Two circuits are set up as shown. The iron rods are placed close together and are able to move.

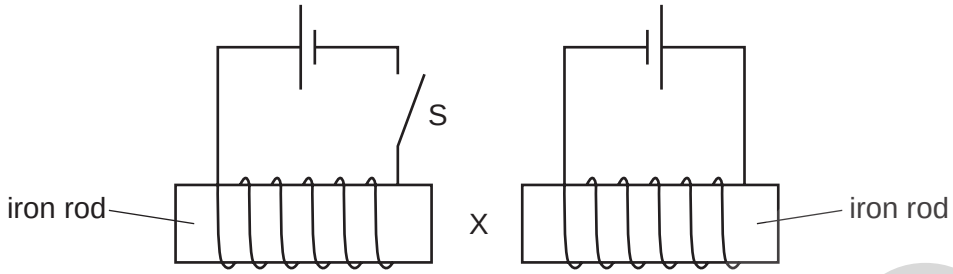

What happens to the size of the gap at X when switch S is closed?

A It decreases.

B It decreases then increases.

C It increases.

D It does not change.

37 When a current-carrying conductor is placed in a magnetic field, it experiences a force.

Which statement about this force is correct?

A It is parallel to both the magnetic field and the direction of the current.

B It is parallel to the magnetic field and perpendicular to the direction of the current.

C It is perpendicular to the magnetic field and parallel to the direction of the current.

D It is perpendicular to both the magnetic field and the direction of the current.

© UCLES 2022
www.root19.com

+91 - 9969 353 391

38 When a beam of α-particles is incident on a thin metal foil, most of them follow a path represented by path X in the diagram. A small number of α-particles follow a path represented by path Y in the diagram.

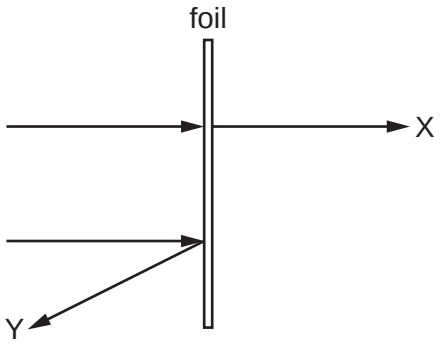

Which row correctly describes a conclusion that can be drawn from each of these observations about the structure of the atom?

	most follow path X	some follow path Y
A	atom is mostly empty space	atom contains something that repels α-particles
B	atom is mostly empty space	nucleus contains protons and neutrons
C	atom is neutral	atom contains something that repels α-particles
D	atom is neutral	nucleus contains protons and neutrons

39 Nuclear fusion is a reaction that takes place in stars.

Which row describes this reaction?

	action of atomic nuclei	energy
A	an atomic nucleus splits into two or more smaller nuclei	absorbed
B	an atomic nucleus splits into two or more smaller nuclei	released
C	atomic nuclei join together to form a larger nucleus	absorbed
D	atomic nuclei join together to form a larger nucleus	released

© UCLES 2022
www.root19.com

+91 - 9969 353 591

40 When a radioactive isotope is set up close to a counter, a count rate of 38 000 counts / s is obtained. The table shows the count rate from the isotope over a three-year period.

time / years	count rate / counts / s
0	38 000
1	26 000
2	17 000
3	12 000

What is the half-life of the isotope?

A less than 1 year

B more than 1 year but less than 2 years

C more than 2 years but less than 3 years

D more than 3 years

Permission to reproduce items where third-party owned material protected by copyright is included has been sought and cleared where possible. Every reasonable effort has been made by the publisher (UCLES) to trace copyright holders, but if any items requiring clearance have unwittingly been included, the publisher will be pleased to make amends at the earliest possible opportunity.

To avoid the issue of disclosure of answer-related information to candidates, all copyright acknowledgements are reproduced online in the Cambridge Assessment International Education Copyright Acknowledgements Booklet. This is produced for each series of examinations and is freely available to download at www.cambridgeinternational.org after the live examination series.

Cambridge Assessment International Education is part of Cambridge Assessment. Cambridge Assessment is the brand name of the University of Cambridge Local Examinations Syndicate (UCLES), which is a department of the University of Cambridge.

© UCLES 2022 www.root19.com

+91 - 9969 353 391